CMI MATERIAL NUMBER

ITEM NO.	PART NUMBER	DESCRIPTION	QTY.
1	38410	CLAMPING BRACKET	4
2	39136	DOWNTURN TIP	1
3	3_8-24 X 2.5	Socket Head Cap Screw	2
4	HEX BOLT	1/4-20 x .50 HEX HEAD BOLT	1
5	3_8	Flat Washer	4
6	0.375-16	Hex Jam Nut	2
7	1/4-20	Hex Jam Nut	1

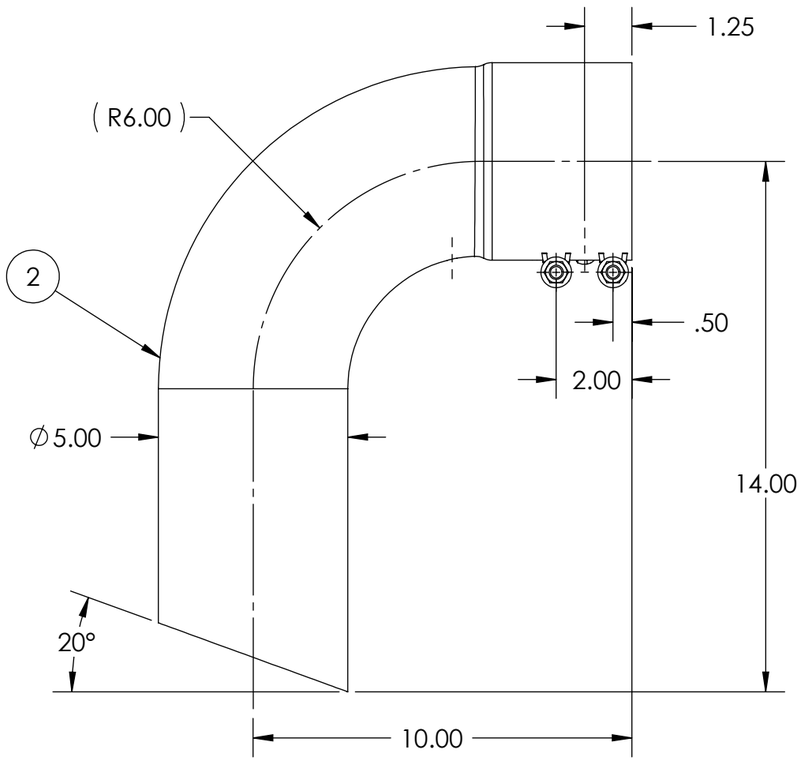

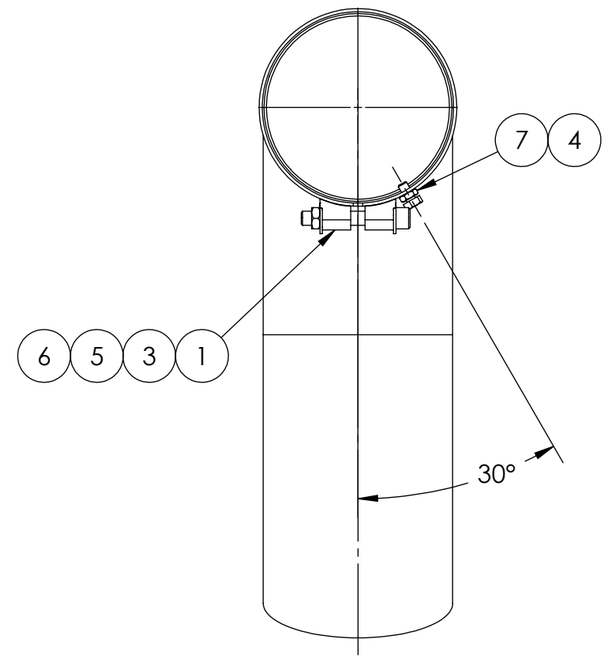

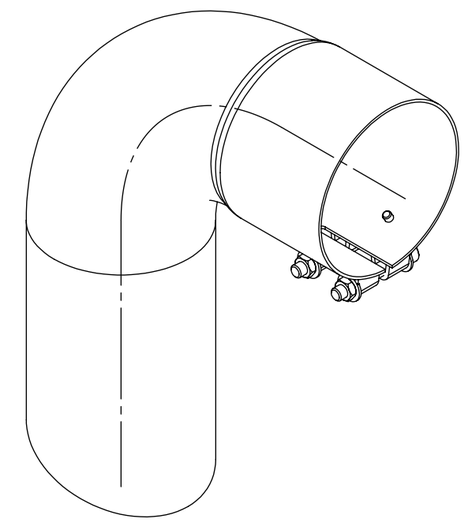

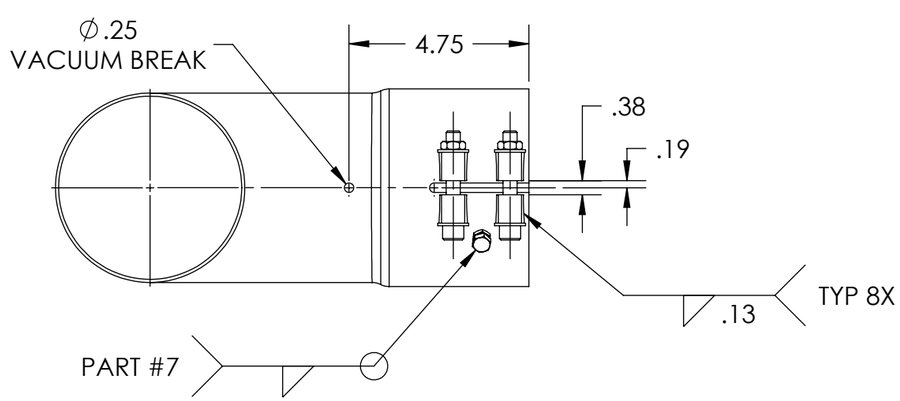

REVISIONS					
ECN#	REV.	DESCRIPTION	BY:	CHK'D	DATE
0229	A	RELEASED FOR TOOLING AND TEST	JJR		08/05/09
1249	B	MATERIAL TO .083 - TO MATCH SYTELINE/PRODUCTION	TJP		3/9/2017

Custom Marine STAINLESS EXHAUST

UNLESS OTHERWISE SPECIFIED
DIMENSIONS ARE IN INCHES
DIMENSIONAL TOLERANCING;
2 PLACE ±.03
3 PLACE ±.005
ANGLES ±1°

DO NOT SCALE DRAWING

DEPARTMENT

PREPARED	J RADKE	08/05/09
CHECKED		
ENGINEER	.	.

CUSTOM MARINE INCORPORATED RESERVES PROPRIETARY RIGHTS TO THIS DRAWING AND THE DATA SHOWN THEREON. SAID DRAWING AND/OR DATA ARE CONFIDENTIAL AND ARE NOT TO BE USED OR REPRODUCED FOR ANY PURPOSE WITHOUT THE WRITTEN CONSENT OF CUSTOM MARINE INCORPORATED.

THIRD ANGLE PROJECTION

CUSTOM MARINE INCORPORATED
NEENAH, WI

DESCR. DOWNTURN TIP ASSY
A=5, B=10, C=14

SIZE	WEIGHT LBS.	DWG. NO.	REV.
B		39136	B

SCALE 1:4 | MATERIAL: | SHEET 1 OF 2

F:\HOME\CAD\cmi-cma work folder\solidworks files\CMI\PART PRINTS\39000\39100\

SOLIDWORKS DRAWING FILE

CMI MATERIAL NUMBER

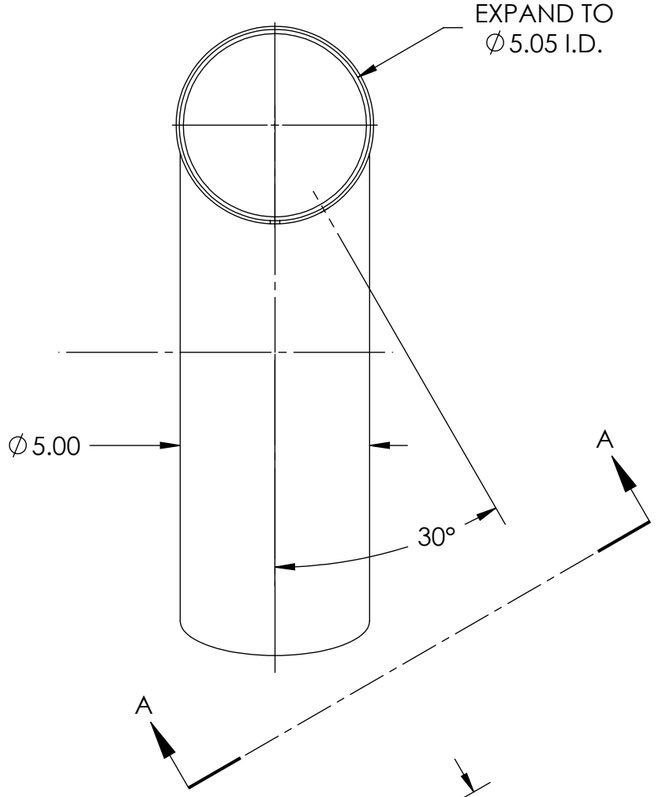

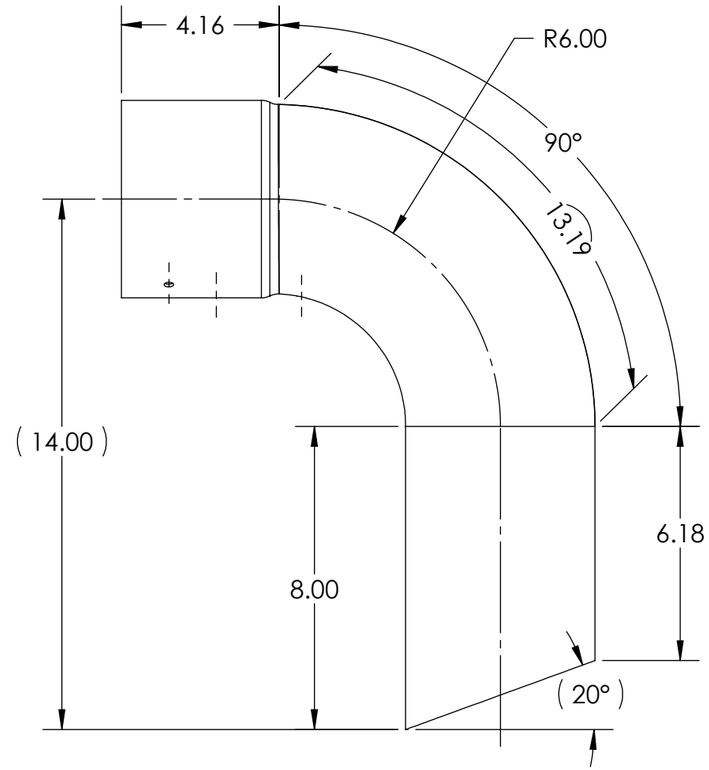

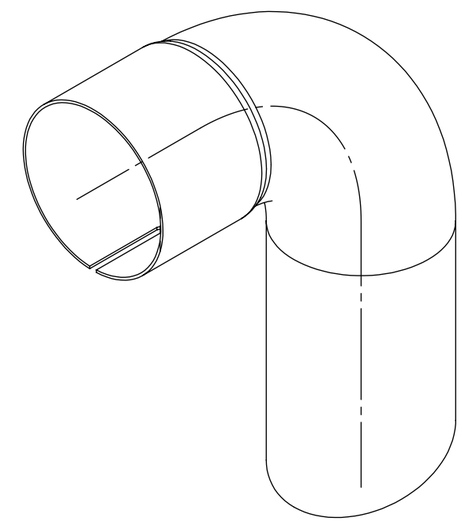

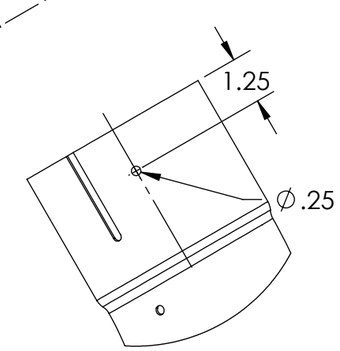

SECTION A-A

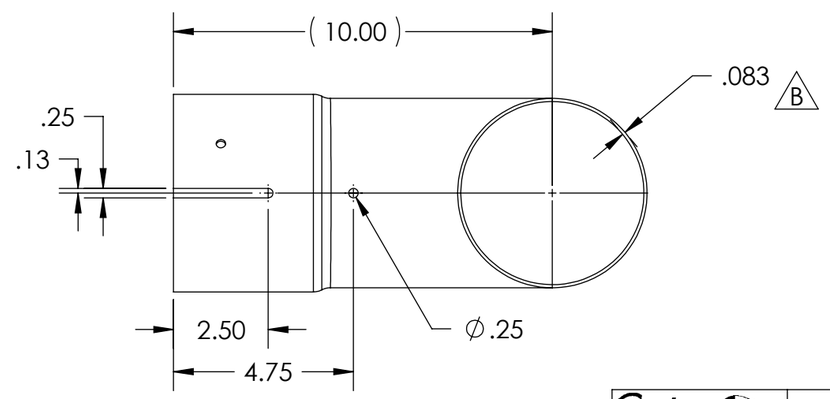

Custom Marine STAINLESS EXHAUST	DEPARTMENT .		**CUSTOM MARINE INCORPORATED** NEENAH, WI
	PREPARED	J RADKE	08/04/09
	CHECKED	.	.
	ENGINEER	.	.
UNLESS OTHERWISE SPECIFIED DIMENSIONS ARE IN INCHES DIMENSIONAL TOLERANCING; 2 PLACE ±.03 3 PLACE ±.005 ANGLES ±1°	CUSTOM MARINE INCORPORATED RESERVES PROPRIETARY RIGHTS TO THIS DRAWING AND THE DATA SHOWN THEREON. SAID DRAWING AND/OR DATA ARE CONFIDENTIAL AND ARE NOT TO BE USED OR REPRODUCED FOR ANY PURPOSE WITHOUT THE WRITTEN CONSENT OF CUSTOM MARINE INCORPORATED.		DESCR. DOWNTURN TIP 5.0 X 10.0 X 14.0
			SIZE B / WEIGHT LBS. 7.65 / DWG. NO. 39136 / REV. B
DO NOT SCALE DRAWING	THIRD ANGLE PROJECTION		SCALE 1:4 / MATERIAL: AISI 304 / SHEET 2 OF 2

F:\HOME\CAD\cmi-cma work folder\solidworks files\CMI\PART PRINTS\39000\39100\

SOLIDWORKS DRAWING FILE